Description

The PAM8302A is a 2.5W Class-D mono audio amplifier. Its low THD+N feature offers high-quality sound reproduction. The new filterless architecture allows the device to drive speakers directly instead of using low-pass output filters thus saving system cost and PCB area.

With the same number of external components, the efficiency of the PAM8302A is much better than that of Class-AB cousins. It can optimize battery life thus is ideal for portable applications.

The PAM8302A is available in MSOP-8, SO-8, and U-DFN3030-8 (Type E) packages.

Features

- 2.5W Output at 10% THD with a 4Ω Load and 5V Power Supply
- Filterless, Low Quiescent Current and Low EMI
- High Efficiency up to 88%
- Superior Low Noise
- Short Circuit Protection
- Thermal Shutdown
- Few External Components to Save Space and Cost
- MSOP-8, SO-8 and U-DFN3030-8 (Type E) Packages Available
- **Totally Lead-Free & Fully RoHS Compliant (Notes 1 & 2)**
- **Halogen and Antimony Free. "Green" Device (Note 3)**
- **For automotive applications requiring specific change control (i.e. parts qualified to AEC-Q100/101/200, PPAP capable, and manufactured in IATF 16949 certified facilities), please contact us or your local Diodes representative.**
  https://www.diodes.com/quality/product-definitions/

Applications

- PMP/MP4
- GPS
- Portable Speakers
- 2-Way Radios
- Hands-Free Phones/Speaker Phones
- Cellular Phones

Pin Assignments

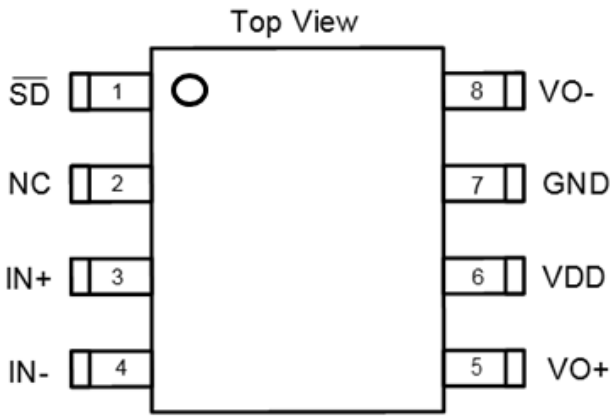

SO-8

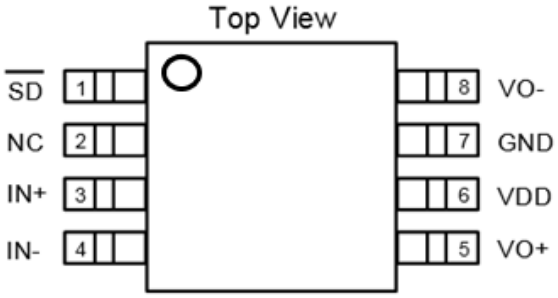

MSOP-8

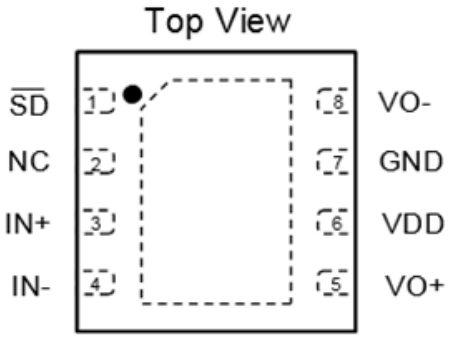

U-DFN3030-8 (Type E)

Notes:
1. No purposely added lead. Fully EU Directive 2002/95/EC (RoHS), 2011/65/EU (RoHS 2) & 2015/863/EU (RoHS 3) compliant.
2. See https://www.diodes.com/quality/lead-free/ for more information about Diodes Incorporated's definitions of Halogen- and Antimony-free, "Green" and Lead-free.
3. Halogen- and Antimony-free "Green" products are defined as those which contain <900ppm bromine, <900ppm chlorine (<1500ppm total Br + Cl) and <1000ppm antimony compounds.

© Diodes Incorporated

Typical Applications Circuit

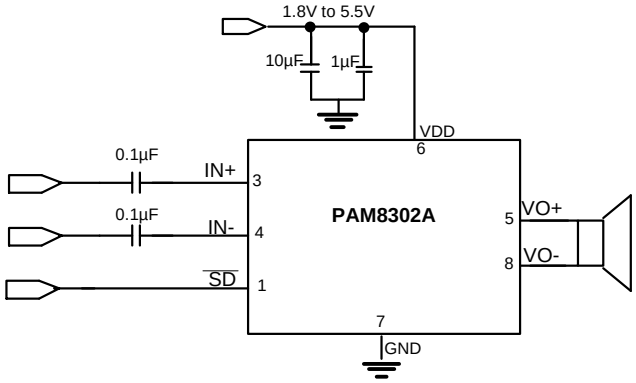

Functional Block Diagram

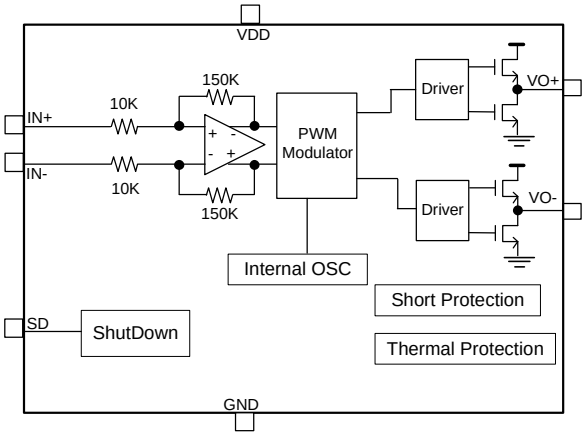

Absolute Maximum Ratings (@TA = +25°C, unless otherwise specified.)

These are stress ratings only and functional operation is not implied. Exposure to absolute maximum ratings for prolonged time periods may affect device reliability. All voltages are with respect to ground.

Parameter	Rating	Unit
Supply Voltage at No Input Signal	6.0	V
Input Voltage	-0.3 to V_{DD} +0.3	
Maximum Junction Temperature	+150	°C
Storage Temperature	-65 to +150	
Soldering Temperature	+300, 5s	

© Diodes Incorporated

Recommended Operating Conditions (@TA = +25°C, unless otherwise specified.)

Parameter	Rating	Unit
Supply Voltage Range	2.0 to 5.5	V
Operation Temperature Range	-40 to +85	°C
Junction Temperature Range	-40 to +125	°C

Thermal Information

Parameter	Package	Symbol	Max	Unit
Thermal Resistance (Junction to Ambient)	SO-8	θ_{JA}	115	°C/W
	MSOP-8		180	
	U-DFN3030-8 (Type E)		47.9	

Electrical Characteristics (@T_A = +25°C, V_{IN} = 3.6V, V_O = 1.8V, C_{IN} = 10µF, C_{OUT} = 10µF, L = 4.7µH, unless otherwise specified.)

Parameter	Symbol	Test Conditions		Min	Typ	Max	Unit
Supply Voltage Range	V_{DD}	—		2.0	—	5.5	V
Quiescent Current	I_Q	No Load		—	4	8	mA
Shutdown Current	I_{SHDN}	V_{SHDN} = 0V		—	—	1	µA
Output Power	P_O	f = 1kHz, R_L = 4Ω, THD+N = 10%	V_{DD} = 5V	2.25	2.50	—	W
			V_{DD} = 3.6V	1.10	1.25	—	
		f = 1kHz, R_L = 4Ω, THD+N = 1%	V_{DD} = 5V	1.80	2.00	—	
			V_{DD} = 3.6V	0.86	0.95	—	
		f = 1kHz, R_L = 8Ω, THD+N = 10%	V_{DD} = 5V	1.35	1.50	—	
			V_{DD} = 3.6V	0.72	0.80	—	
		f = 1kHz, R_L = 8Ω, THD+N = 1%	V_{DD} = 5V	1.15	1.30	—	
			V_{DD} = 3.6V	0.6	0.65	—	
Peak Efficiency	η	f = 1kHz		—	85	88	%
Total Harmonic Distortion Plus Noise	THD+N	RL = 8Ω, P_O = 0.1W, f = 1kHz		—	0.30	0.35	%
		RL = 8Ω, P_O = 0.5W, f = 1kHz		—	0.45	0.50	
		RL = 4Ω, P_O = 0.1W, f = 1kHz		—	0.35	0.40	
		RL = 4Ω, P_O = 0.5W, f = 1kHz		—	0.40	0.45	
Gain	G_V	—		—	23.5	—	dB
Power Supply Ripple Rejection	PSRR	No Inputs, f = 1kHz, V_{PP} = 200mV		45	50	—	dB
Dynamic Range	DYN	f = 20 to 20kHz		85	90	—	dB
Signal to Noise Ratio	SNR	f = 20 to 20kHz		75	80	—	dB
Noise	V_N	No A-Weighting		—	180	300	µV
		A-Weighting		—	120	200	
Oscillator Frequency	f_{OSC}	—		200	250	300	kHz
Drain-Source On-State Resistance	$R_{DS(ON)}$	I_{DS} = 100mA	P MOSFET	—	0.45	0.50	Ω
			N MOSFET	—	0.20	0.25	
SHD Input High	V_{SH}	—		1.2	—	—	V
SHD Input Low	V_{SL}	—		—	—	0.4	
Over Temperature Protection	OTP	Junction Temperature		+120	+135	—	°C
Over Temperature Hysteresis	OTH	—		—	+30	—	°C

© Diodes Incorporated

Typical Performance Characteristics (@T_A = +25°C, unless otherwise specified.)

THD+N VS Output Power
R_L=8Ω, Gain=23dB, f=1kHz

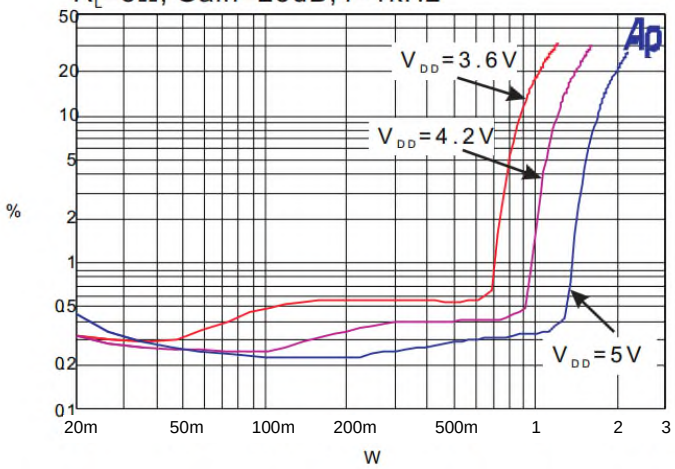

THD+N VS Output Power
R_L=4Ω, Gain=23dB, f=1kHz

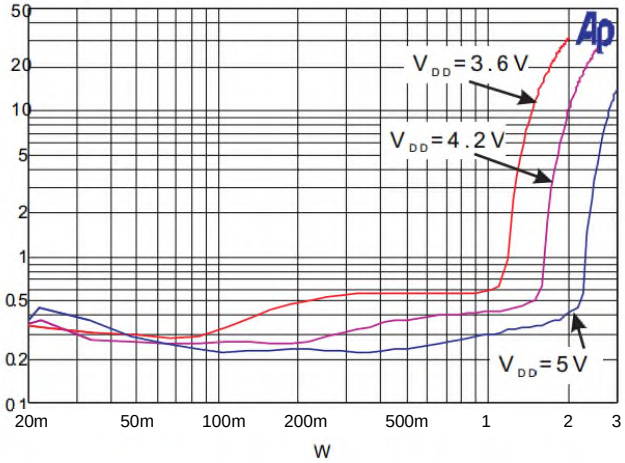

THD+N VS Frequency
R_L=8Ω, Cin=0.1μF, Gain=23dB, V_{DD}=5V

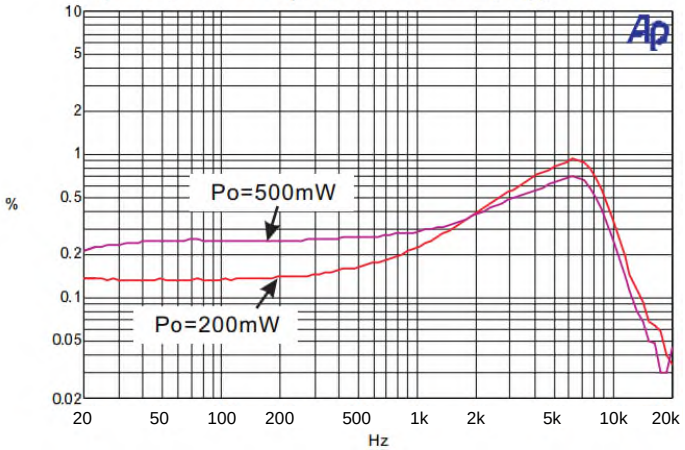

THD+N VS Frequency
R_L=8Ω, Cin=0.1μF, Gain=23dB, V_{DD}=3.6V

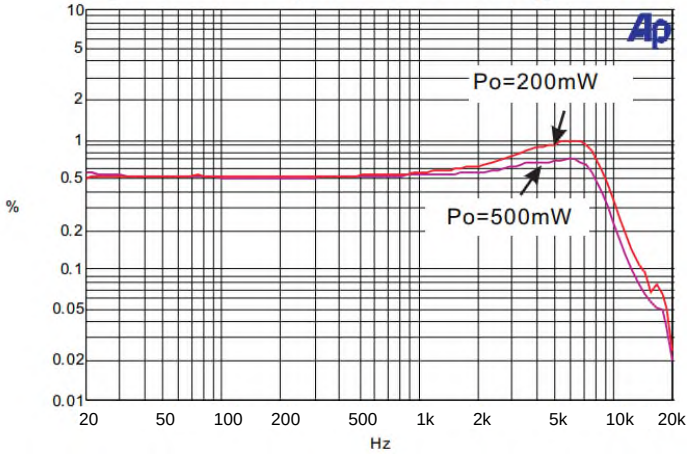

THD+N VS Frequency
R_L=4Ω, Cin=0.1μF, Gain=23dB, V_{DD}=5V

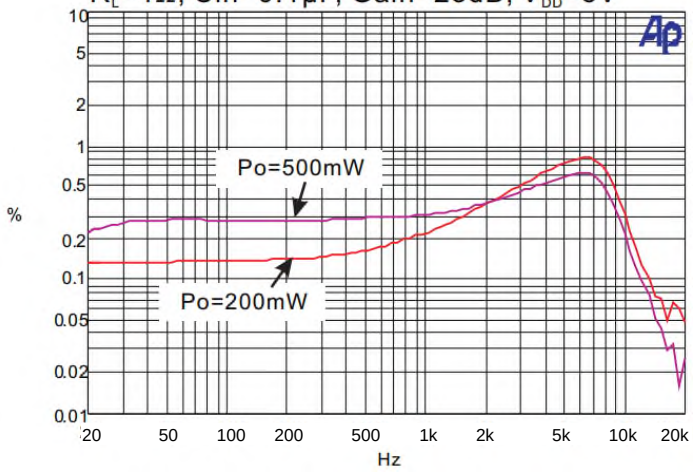

THD+N VS Frequency
R_L=4Ω, Cin=0.1μF, Gain=23dB, V_{DD}=3.6V

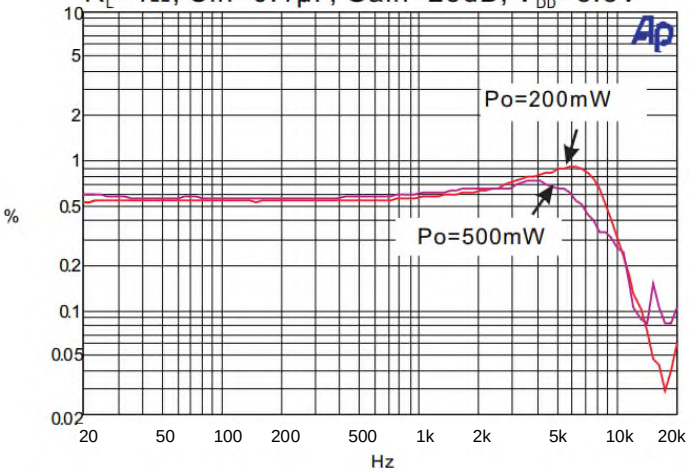

© Diodes Incorporated

Typical Performance Characteristics (continued) (@T_A = +25°C, unless otherwise specified.)

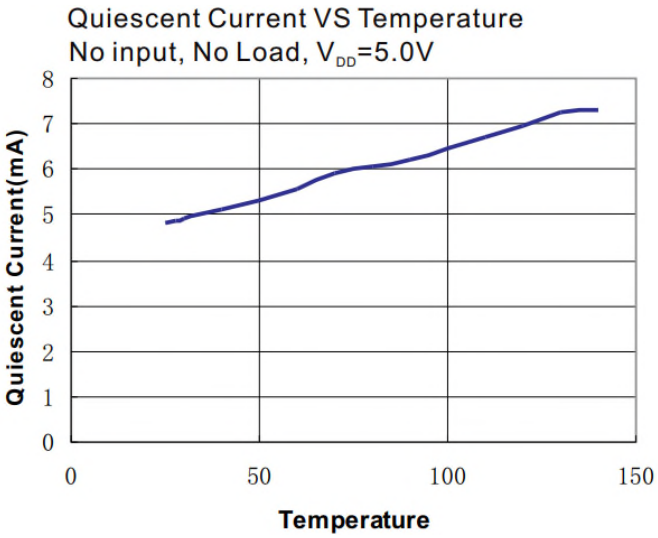

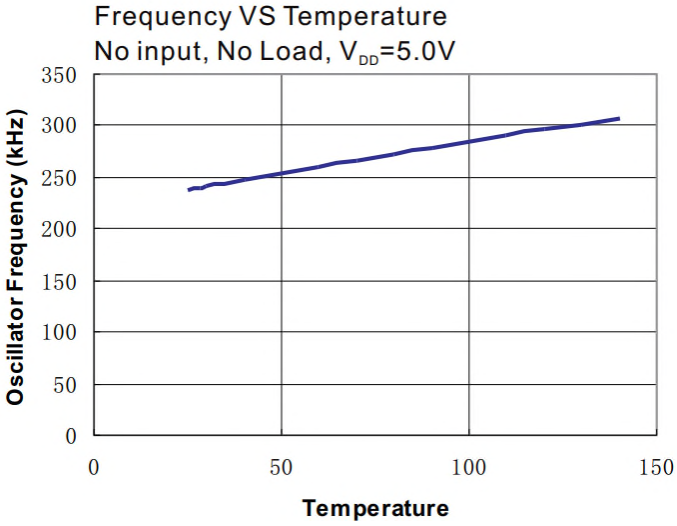

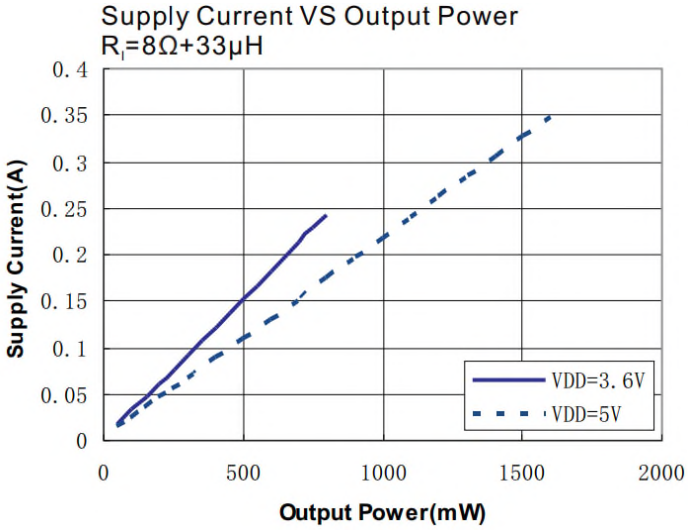

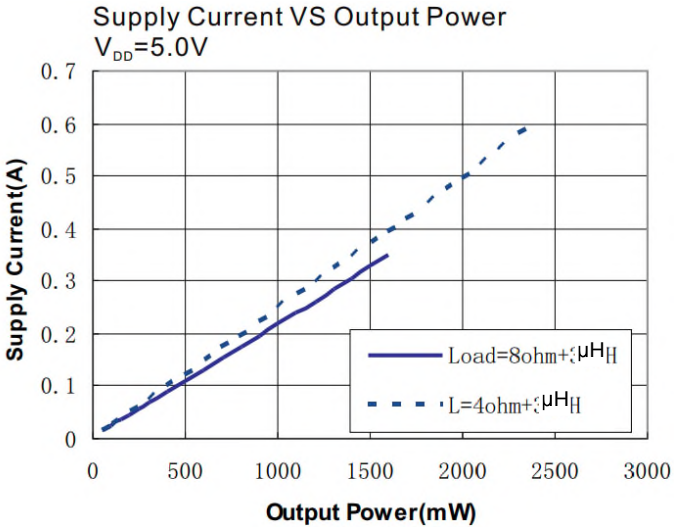

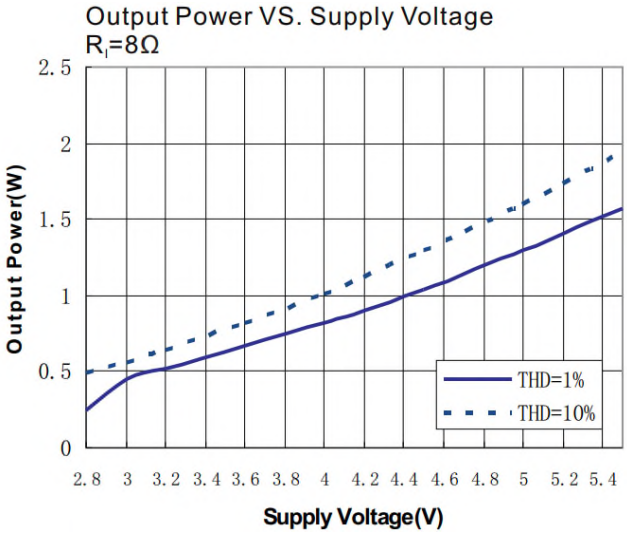

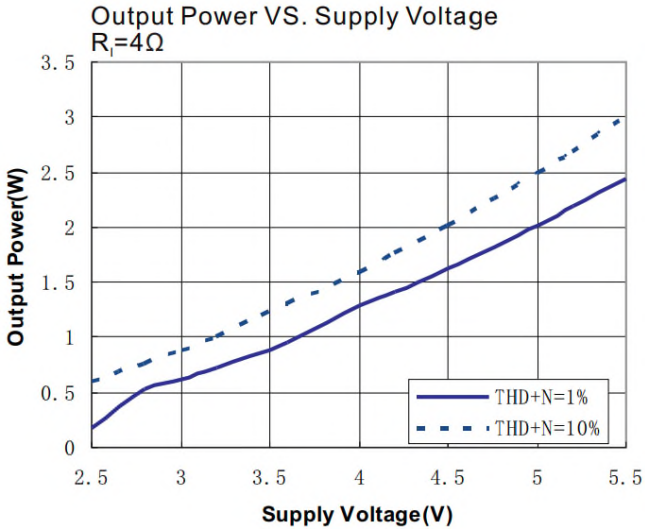

© Diodes Incorporated

Typical Performance Characteristics (continued) (@T_A = +25°C, unless otherwise specified.)

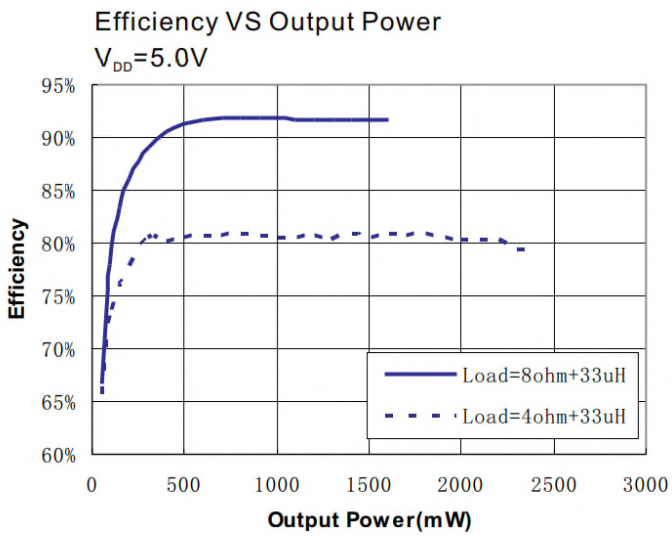

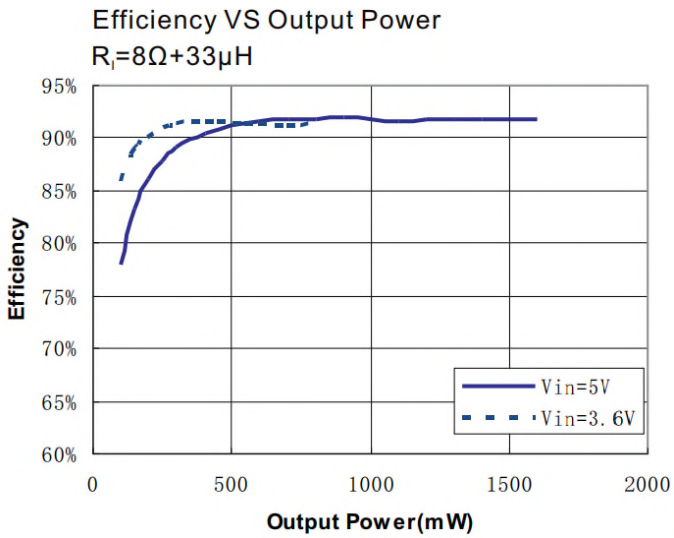

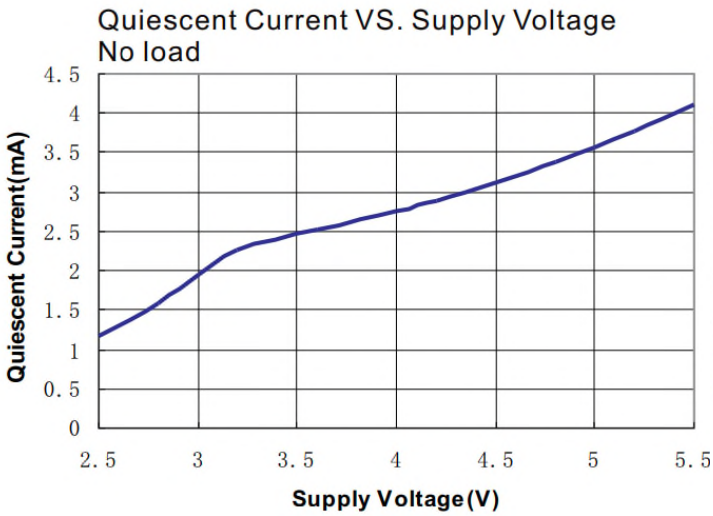

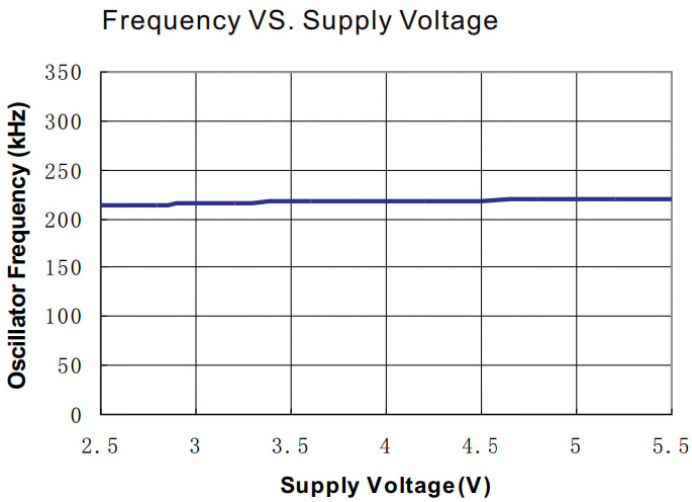

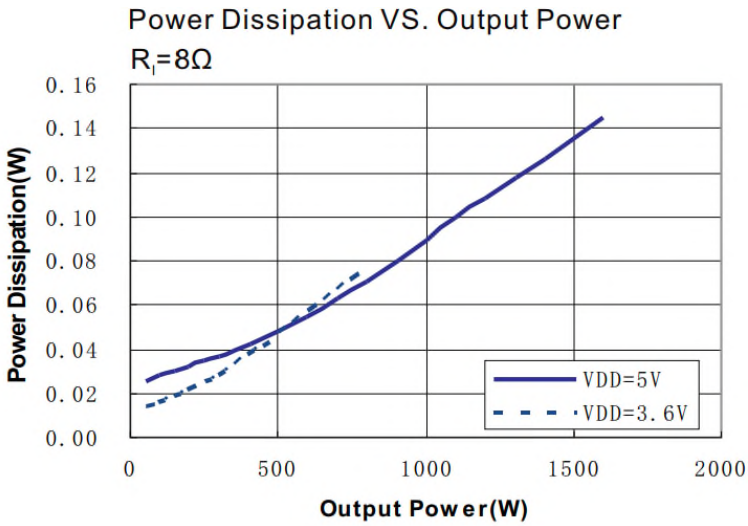

© Diodes Incorporated

Application Information (Notes 4 & 5)

Test Setup for Performance Testing

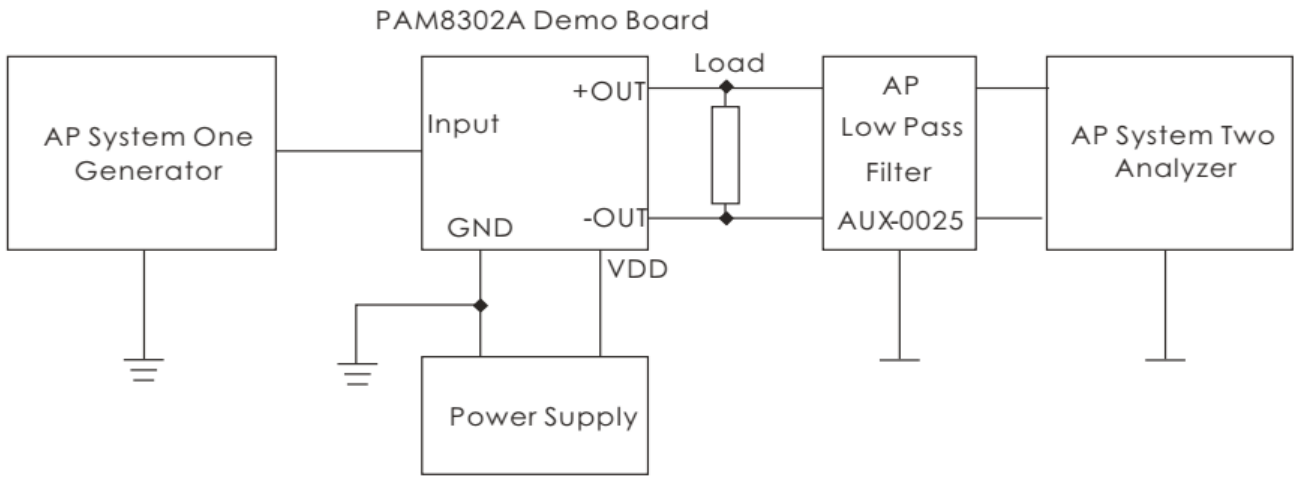

Notes: 4. The AP AUX-0025 low pass filter is necessary for every class-D amplifier measurement with AP analyzer.
5. Two 22µH inductors are used in series with load resistor to emulate the small speaker for efficiency measurement.

Maximum Gain

As shown in block diagram (Page 2), the PAM8302A differential gain for the IC is:

$$A = 20*\log (R_F/R_I)$$

The PAM8302A sets maximum R_F = 150kΩ, minimum R_I = 10kΩ, so the maximum closed-gain around 23.5dB. If need gain adjustment, you can put external R_{IN} at the input pin, and gain calculate as 20*log (150K/ (10K+R_{IN})).

Input Capacitor (CI)

In typical application, an input capacitor, C_I is required to allow the amplifier to bias input signals to a proper DC level for optimum operation. In this case, C_I and the minimum input impedance R_I (10k internal) form a high-pass filter with a corner frequency determined by the following equation:

$$f_C = \frac{1}{2\Pi R_I C_I}$$

It is important to choose the value of C_I as it directly affects low-frequency performance of the circuit, for example, when an application requires a flat bass response as low as 100Hz. Equation is reconfigured as follows:

$$C_I = \frac{1}{2\Pi R_I f_I}$$

As the input resistance is variable for the C_I value of 0.16µF, one should actually choose the C_I within the range of 0.1µF to 0.22µF. A further consideration for this capacitor is the leakage path from the input source through the input network (R_I, R_F, C_I) to the load. This leakage current creates a DC offset voltage at the input to the amplifier that reduces useful headroom—especially in high-gain application. For this reason, a low leakage tantalum or ceramic capacitor is the best choice. When a polarized capacitor is used, the positive side of the capacitor should face the amplifier input in most applications as the DC level is held at V_{DD}/2, which is likely higher than the source DC level. Please note that it is important to confirm the capacitor polarity in the application.

© Diodes Incorporated

Application Information (continued)

Power Supply Decoupling (CS)

The PAM8302A is a high-performance CMOS audio amplifier that requires adequate power supply decoupling to ensure the output THD and PSRR as low as possible. Power supply decoupling affects low frequency response. Optimum decoupling is achieved by using two capacitors of different types that target different types of noise on the power supply leads. For higher-frequency transients, spikes, or digital hash on the line, a good low equivalent-series-resistance (ESR) ceramic capacitor, typical 1.0µF is good, placing it as close as possible to the device V_{DD} terminal. For filtering lower frequency noise signals, capacitor of 10µF or larger, closely located to near the audio power amplifier is recommended.

Shutdown Operation

In order to reduce shutdown power consumption, the PAM8032A contains shutdown circuitry for turn to turn off the amplifier. This shutdown feature turns the amplifier off when a logic low is applied on the $\overline{SD}$ pin. By switching the shutdown pin over to GND, the PAM8302A supply current draw will be minimized in idle mode.

Note: For the best power on/off pop performance, the amplifier should be set in the shutdown mode prior to power on/off operation.

Undervoltage Lockout (UVLO)

The PAM8302A incorporates circuitry to detect low on or off voltage. When the supply voltage drops to 2.1V or below, the PAM8302A goes into a state of shutdown, and the device comes out of its shutdown state to normal operation by reset the power supply or $\overline{SD}$ pin.

How to Reduce EMI (Electro Magnetic Interference)

A simple solution is to put an additional capacitor 1000µF at power supply terminal for power line coupling if the traces from amplifier to speakers are short (< 20CM). Most applications require a ferrite bead filter as shown in Figure 1. The ferrite filter depresses EMI of around 1MHz and higher. When selecting a ferrite bead, choose one with high impedance at high frequencies and low impedance at low frequencies.

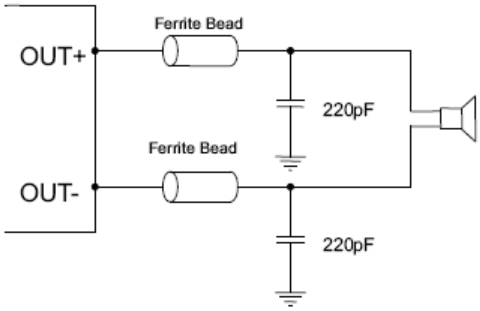

Figure 1 Ferrite Bead Filter to Reduce EMI

System Start-up Timing Recommendation

The start time for SD pin is recommended to delay after rising edge of V_{DD} for 1ms ~100 ms (typically10ms is recommended), depending on customer's application condition.

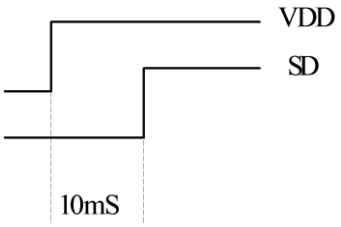

© Diodes Incorporated

Ordering Information (Note 6)

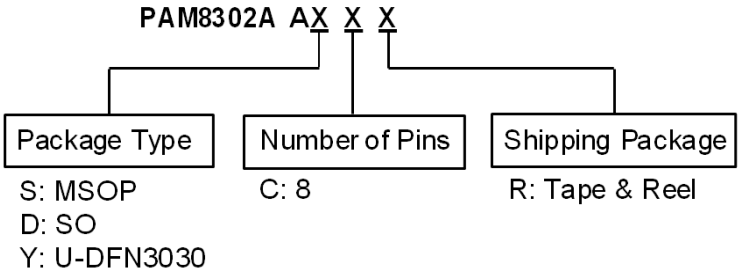

Part Number	Package Type	Standard Package
PAM8302AASCR	MSOP-8	2500 Units/Tape & Reel
PAM8302AADCR	SO-8	2500 Units/Tape & Reel
PAM8302AAYCR	U-DFN3030-8 (Type E)	3000 Units/Tape & Reel

Note: 6. For packaging details, go to our website at https://www.diodes.com/design/support/packaging/diodes-packaging/.

Marking Information

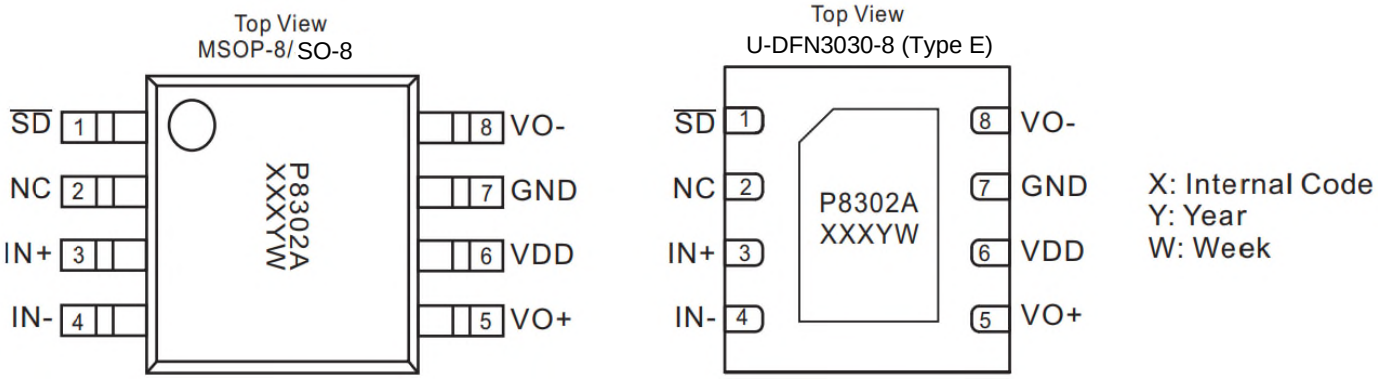

© Diodes Incorporated

Package Outline Dimensions

Please see http://www.diodes.com/package-outlines.html for the latest version.

MSOP-8

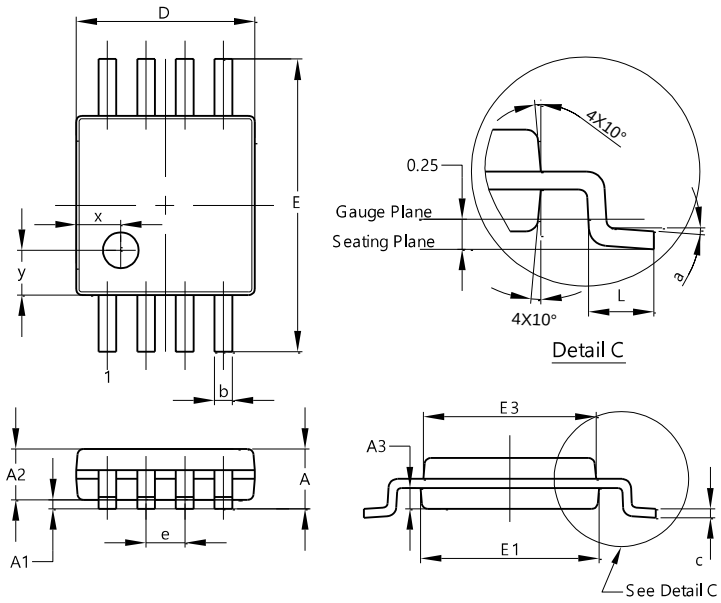

MSOP-8			
Dim	**Min**	**Max**	**Typ**
A	—	1.10	—
A1	0.05	0.15	0.10
A2	0.75	0.95	0.86
A3	0.29	0.49	0.39
b	0.22	0.38	0.30
c	0.08	0.23	0.15
D	2.90	3.10	3.00
E	4.70	5.10	4.90
E1	2.90	3.10	3.00
E3	2.85	3.05	2.95
e	—	—	0.65
L	0.40	0.80	0.60
a	0°	8°	4°
x	—	—	0.750
y	—	—	0.750
All Dimensions in mm			

SO-8

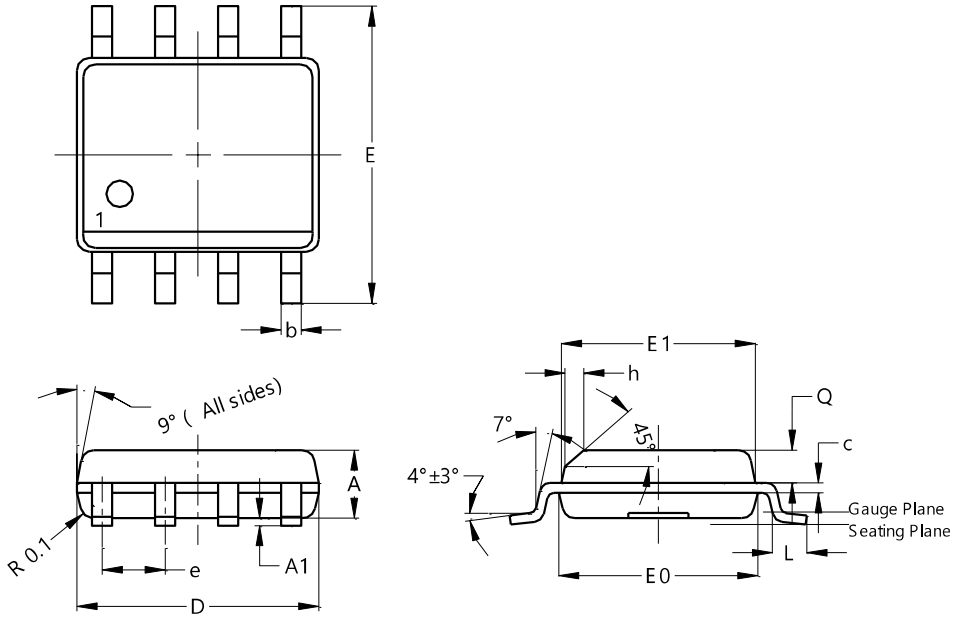

SO-8			
Dim	**Min**	**Max**	**Typ**
A	1.40	1.50	1.45
A1	0.10	0.20	0.15
b	0.30	0.50	0.40
c	0.15	0.25	0.20
D	4.85	4.95	4.90
E	5.90	6.10	6.00
E1	3.80	3.90	3.85
E0	3.85	3.95	3.90
e	—	—	1.27
h	—	—	0.35
L	0.62	0.82	0.72
Q	0.60	0.70	0.65
All Dimensions in mm			

© Diodes Incorporated

Package Outline Dimensions (continued)

Please see http://www.diodes.com/package-outlines.html for the latest version.

U-DFN3030-8 (Type E)

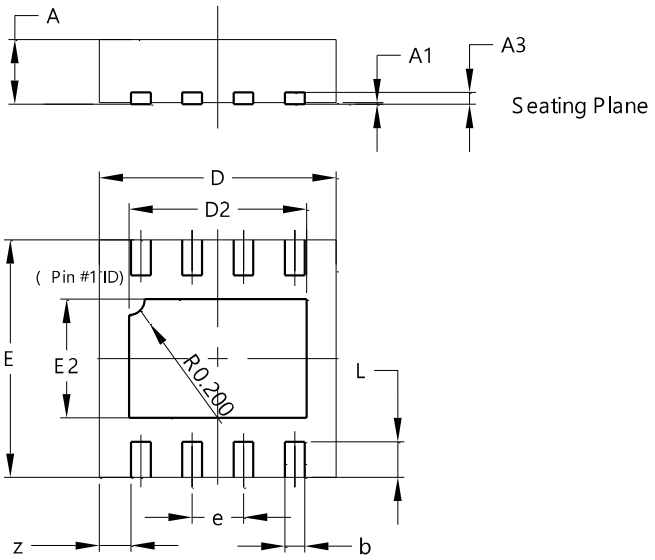

U-DFN3030-8 (Type E)			
Dim	**Min**	**Max**	**Typ**
A	0.57	0.63	0.60
A1	0.00	0.05	0.02
A3	-	-	0.15
b	0.20	0.30	0.25
D	2.95	3.05	3.00
D2	2.15	2.35	2.25
E	2.95	3.05	3.00
E2	1.40	1.60	1.50
e	-	-	0.65
L	0.30	0.60	0.45
z	-	-	0.40
All Dimensions in mm			

Suggested Pad Layout

Please see http://www.diodes.com/package-outlines.html for the latest version.

MSOP-8

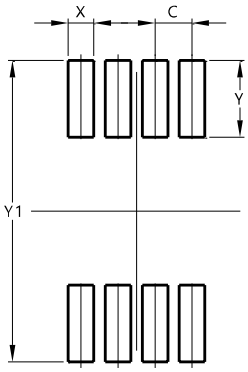

Dimensions	Value (in mm)
C	0.650
X	0.450
Y	1.350
Y1	5.300

© Diodes Incorporated

Suggested Pad Layout (continued)

Please see http://www.diodes.com/package-outlines.html for the latest version.

SO-8

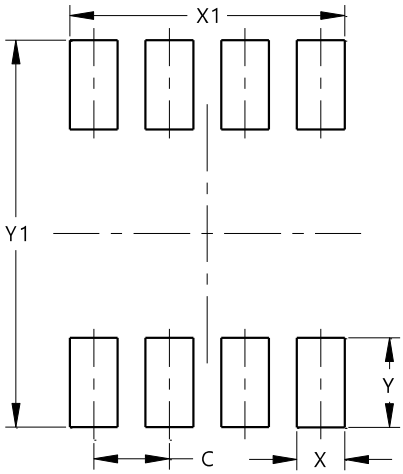

Dimensions	Value (in mm)
C	1.27
X	0.802
X1	4.612
Y	1.505
Y1	6.50

U-DFN3030-8 (Type E)

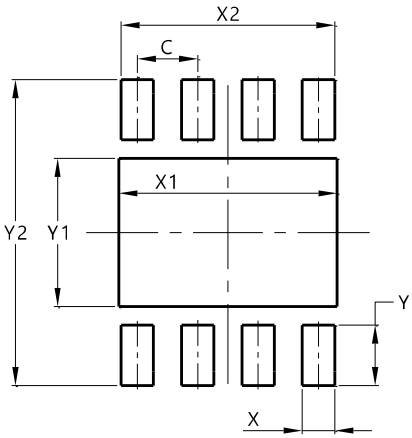

Dimensions	Value (in mm)
C	0.650
X	0.350
X1	2.350
X2	2.300
Y	0.650
Y1	1.600
Y2	3.300

© Diodes Incorporated

Mechanical Data

MSOP-8

- Moisture Sensitivity: Level 1 per J-STD-020
- Terminals: Finish – Matte Tin Plated Leads, Solderable per MIL-STD-202, Method 208 e3
- Weight: 0.0246 grams (Approximate)

SO-8

- Moisture Sensitivity: Level 1 per J-STD-020
- Terminals: Finish – Matte Tin Plated Leads, Solderable per MIL-STD-202, Method 208 e3
- Weight: 0.074 grams (Approximate)

U-DFN3030-8 (Type E)

- Moisture Sensitivity: Level 1 per J-STD-020
- Terminals: Finish – Matte Tin Plated Leads, Solderable per MIL-STD-202, Method 208 e3
- Weight: 0.018 grams (Approximate)

© Diodes Incorporated

IMPORTANT NOTICE

1. DIODES INCORPORATED AND ITS SUBSIDIARIES ("DIODES") MAKE NO WARRANTY OF ANY KIND, EXPRESS OR IMPLIED, WITH REGARDS TO ANY INFORMATION CONTAINED IN THIS DOCUMENT, INCLUDING, BUT NOT LIMITED TO, THE IMPLIED WARRANTIES OF MERCHANTABILITY, FITNESS FOR A PARTICULAR PURPOSE OR NON-INFRINGEMENT OF THIRD PARTY INTELLECTUAL PROPERTY RIGHTS (AND THEIR EQUIVALENTS UNDER THE LAWS OF ANY JURISDICTION).

2. The Information contained herein is for informational purpose only and is provided only to illustrate the operation of Diodes products described herein and application examples. Diodes does not assume any liability arising out of the application or use of this document or any product described herein. This document is intended for skilled and technically trained engineering customers and users who design with Diodes products. Diodes products may be used to facilitate safety-related applications; however, in all instances customers and users are responsible for (a) selecting the appropriate Diodes products for their applications, (b) evaluating the suitability of the Diodes products for their intended applications, (c) ensuring their applications, which incorporate Diodes products, comply the applicable legal and regulatory requirements as well as safety and functional-safety related standards, and (d) ensuring they design with appropriate safeguards (including testing, validation, quality control techniques, redundancy, malfunction prevention, and appropriate treatment for aging degradation) to minimize the risks associated with their applications.

3. Diodes assumes no liability for any application-related information, support, assistance or feedback that may be provided by Diodes from time to time. Any customer or user of this document or products described herein will assume all risks and liabilities associated with such use, and will hold Diodes and all companies whose products are represented herein or on Diodes' websites, harmless against all damages and liabilities.

4. Products described herein may be covered by one or more United States, international or foreign patents and pending patent applications. Product names and markings noted herein may also be covered by one or more United States, international or foreign trademarks and trademark applications. Diodes does not convey any license under any of its intellectual property rights or the rights of any third parties (including third parties whose products and services may be described in this document or on Diodes' website) under this document.

5. Diodes products are provided subject to Diodes' Standard Terms and Conditions of Sale (https://www.diodes.com/about/company/terms-and-conditions/terms-and-conditions-of-sales/) or other applicable terms. This document does not alter or expand the applicable warranties provided by Diodes. Diodes does not warrant or accept any liability whatsoever in respect of any products purchased through unauthorized sales channel.

6. Diodes products and technology may not be used for or incorporated into any products or systems whose manufacture, use or sale is prohibited under any applicable laws and regulations. Should customers or users use Diodes products in contravention of any applicable laws or regulations, or for any unintended or unauthorized application, customers and users will (a) be solely responsible for any damages, losses or penalties arising in connection therewith or as a result thereof, and (b) indemnify and hold Diodes and its representatives and agents harmless against any and all claims, damages, expenses, and attorney fees arising out of, directly or indirectly, any claim relating to any noncompliance with the applicable laws and regulations, as well as any unintended or unauthorized application.

7. While efforts have been made to ensure the information contained in this document is accurate, complete and current, it may contain technical inaccuracies, omissions and typographical errors. Diodes does not warrant that information contained in this document is error-free and Diodes is under no obligation to update or otherwise correct this information. Notwithstanding the foregoing, Diodes reserves the right to make modifications, enhancements, improvements, corrections or other changes without further notice to this document and any product described herein. This document is written in English but may be translated into multiple languages for reference. Only the English version of this document is the final and determinative format released by Diodes.

8. Any unauthorized copying, modification, distribution, transmission, display or other use of this document (or any portion hereof) is prohibited. Diodes assumes no responsibility for any losses incurred by the customers or users or any third parties arising from any such unauthorized use.

Copyright © 2021 Diodes Incorporated

www.diodes.com